NERI

Project location:			
Project name:			
Model #:	**8020.001**	Date	

DESCRIPTION

Compliance:
- Compliant with AASHTO 2015 standard.
- Design for wind speed 180 MPH.
* design criteria: 2020 Florida Building Code, Risk Category II, Exposure.

Description
Modular post in UNI EN 1561 cast iron with core in S235J UNI EN 10219-1 steel, hot-galvanized to UNI EN ISO 1461 standards, corresponding in shape, size and ornamentation to the diagrams, which are an integral part of the specifications.
The core (A) is made up of five tubes of different cross-section, according to the internal diameter of the cast iron elements (diam. 5 1/4" x 3' 3 1/4 - diam. 3 2/4" x 4' 5 2/4" - diam. 3" x 35 2/4" - diam. 2 1/4" x 27 2/4" - diam. 1 3/4" x 7 3/4"), welded together at their junctions (B).
It is suitable for flange fixing (diam. 10 2/4" - thickness 3/4") on a foundation plinth (P). It is provided with an M10 earthing bolt, a slot (D - h. 7 1/4" x 1 3/4") for the installation of a class II insulation terminal board with or without fuse (Conchiglia), at the top a 1 1/4" GAS thread (Z), used to secure with a bolt the various cast iron elements.
The cast iron post is made up of a number of elements that are fitted over each other so as to prevent water infiltration.
The elements are as follows:
1°) Base element height 3' 1 3/4", with a circular plinth (F, diam. 15 3/4", height 4") surmounted by a torus (G, diam. 15 3/4") and a tapered central section 23" high (H - lower diam. 14 1/4", I - top diam. 7 3/4") with an inspection hatch (4 3/4" x 11"). The top of the element is composed of a band (L, diam. 11 2/4") decorated with sixteen ovoli and surmounted by a scotia (M, diam. 6") and a torus (N, diam. 8 3/4").
2°) Second element height 3' 5 3/4", decorated at the base for a height of 10 1/4" with four leaves (O, diam. 8 3/4"). The upper part of the element is tapered (lower diam. 5 1/4", top diam. 4 3/4"), and is decorated with sixteen flutes, a torus (Q, diam. 6") and four rosettes (R).
3°) Third element height 3' 5 3/4", tapered (lower diam. 4 3/4", top diam. 4 1/4") and decorated with a torus at the bottom (S, diam. 6").
4°) Fourth element height 3' 5 1/4", composed of a lower tapered section (lower diam. 4", top diam. 3 2/4") decorated with a torus at each end (T - diam. 5", U - diam. 4 2/4"). The top section is in the form of a capital (lower diam. 4", top diam. 9") decorated with four leaves (V).
The above elements are all cast as single pieces.

The total height of these first four elements is 13' 5 3/4".

Protection of surfaces
Please refer to the specification on painting procedures of the materials.

Flange detail

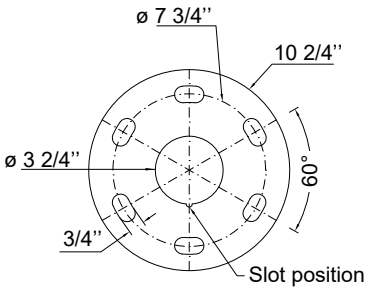

DRAWINGS

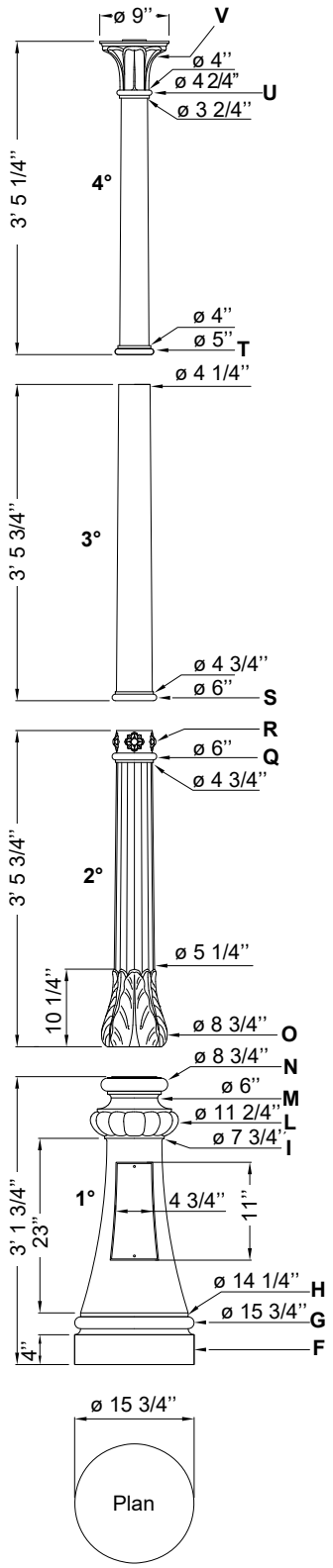

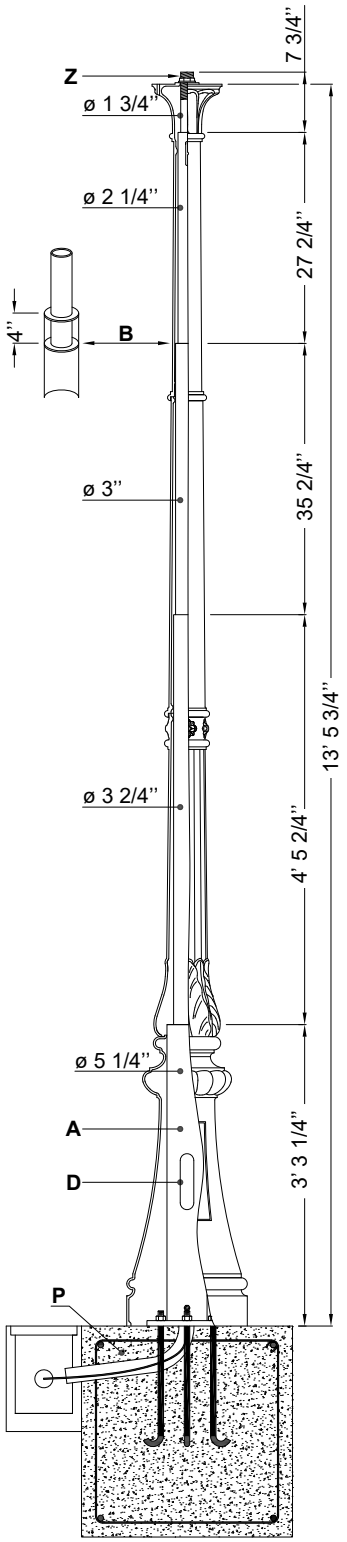

Made in Italy © 2024 NERI S.p.A. All Rights Reserved. The information in this document is subject to change without notice.
Company shall reserve the right at any time and from time to time to modify the specifications or features or to discontinue the sale of any products.