NERI

Cod. **1119.600.200**

Fixing: masonry

Technical sheet

Rev. 01 - 2022/02/14

DESCRIPTION

Conformity
CE certified post conforms to UNI EN 40-5 standard.

Description
Lighting post in steel UNI EN 10219, hot-dip galvanised in accordance with the UNI EN ISO 1461 standard, corresponding in shape and size to the drawing which is an integral part of the design.
The post is composed as follows:
- First element, the core, circular section in hot-dip galvanised steel, made up of three pipes and a plate (between the second and third pipe) welded to one another.
  The pipes are of the following dimensions:
  First pipe: external diameter 12.7 cm, height 280 cm;
  Second pipe: external diameter 10.2 cm, height 400 cm;
  Third pipe: external diameter 6 cm, height 10 cm.
  This first element has:
  A threaded M10 bushing for the earthing connection;
  A 186 x 45 cm slot suitable for mounting class II insulation terminal block with or without fuse (Conchiglia model);
  A 186 x 45 cm slot positioned 11 cm under the floor level to run cables inside it.
- Second element, a door in die-cast aluminium (Conchiglia model, standard type), placed at the closing of the slot with an IP 54 protection grade.

The post must be inserted 80 cm perfectly plumb in a foundation plinth.

Height of the post: 690 cm
Height of the post above ground: 610 cm
Weight: 56 Kg

Protection of the surfaces
See the specific descriptions on the painting cycles of the materials.

DRAWINGS

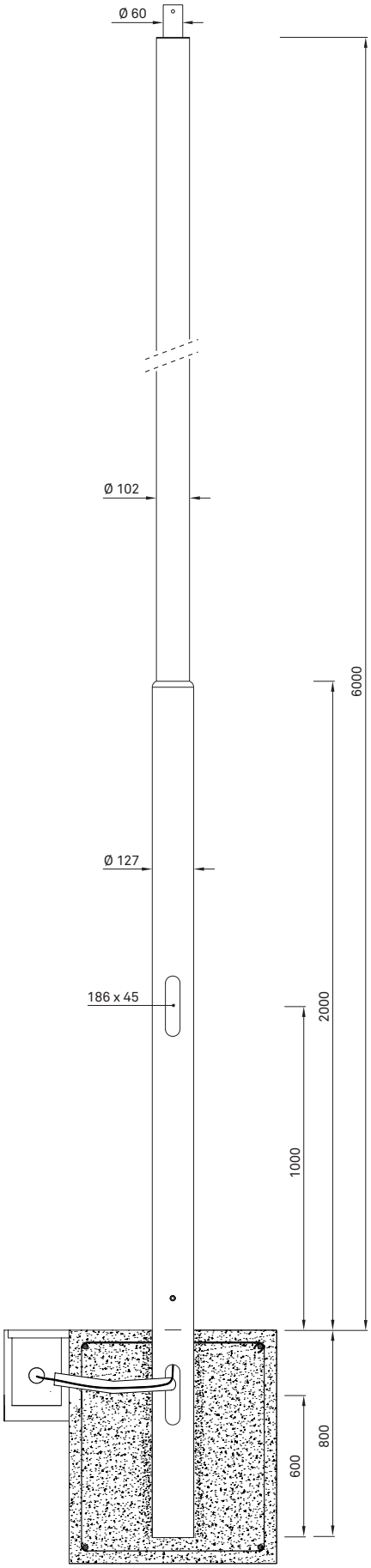

Property of Neri S.p.A. - Any use and reproduction for personal purposes is prohibited. Company shall reserve the right at any time to modify the specification or features without notice.